logitech

Driving Force™ Shifter

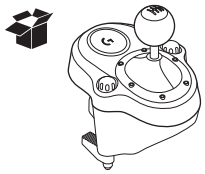

1

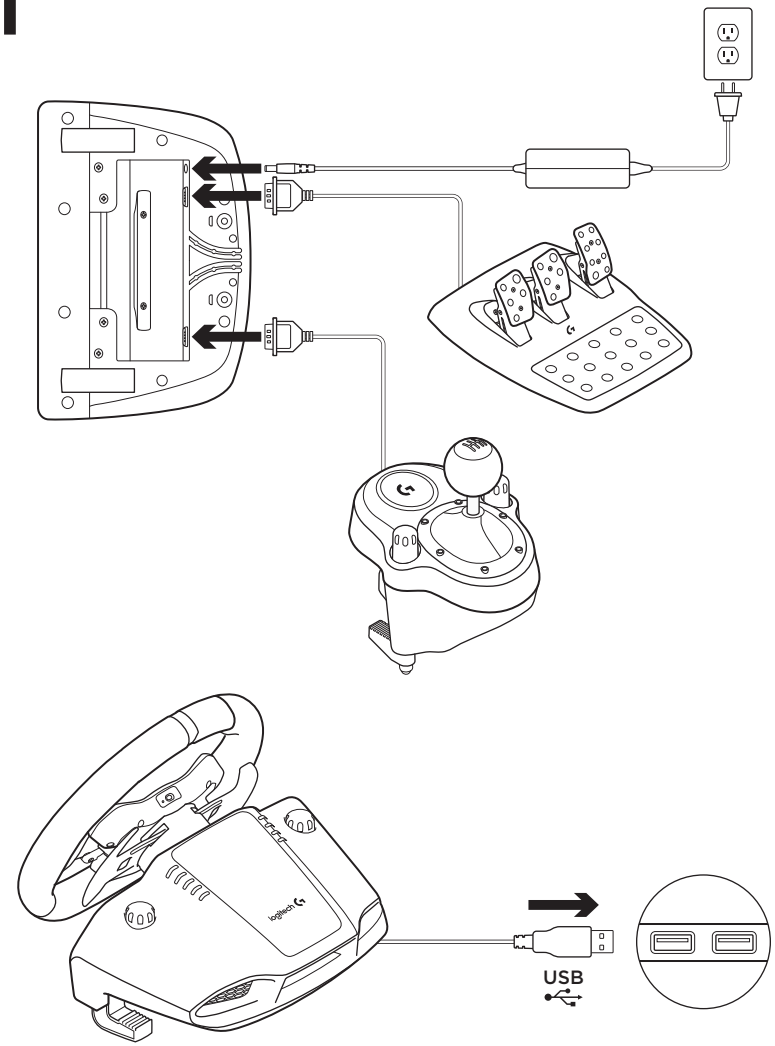

2

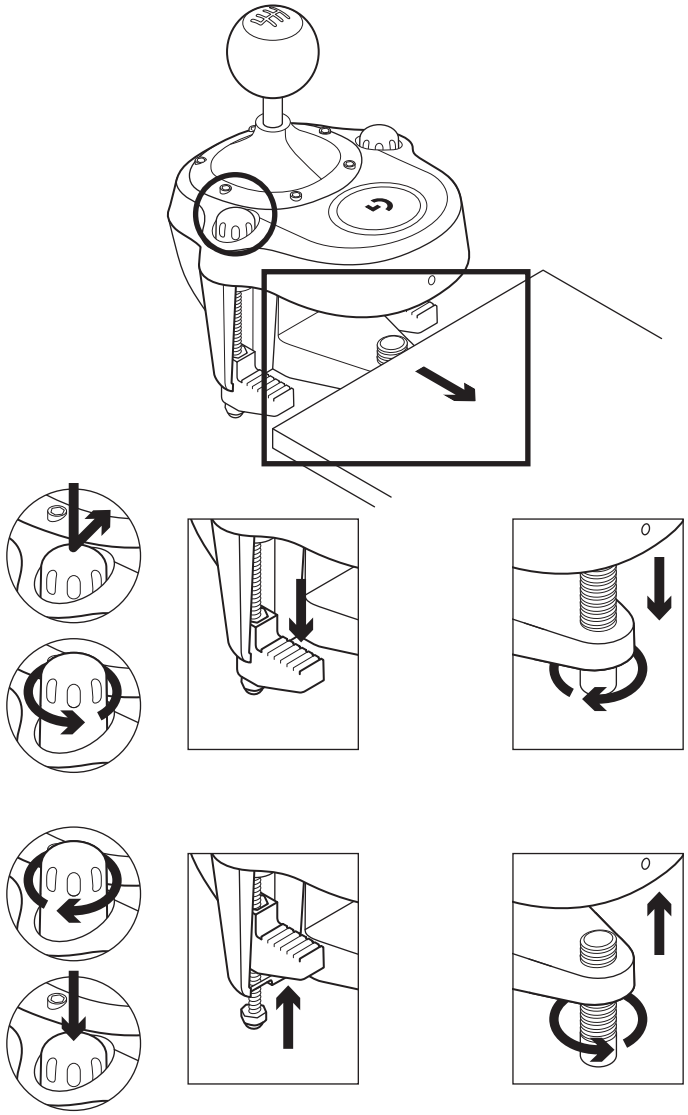

PDF www.logitech.com/support/shifter

620-006497.002