FIGHTER

DIABLO
CHAIRS

INSTRUCTION MANUAL

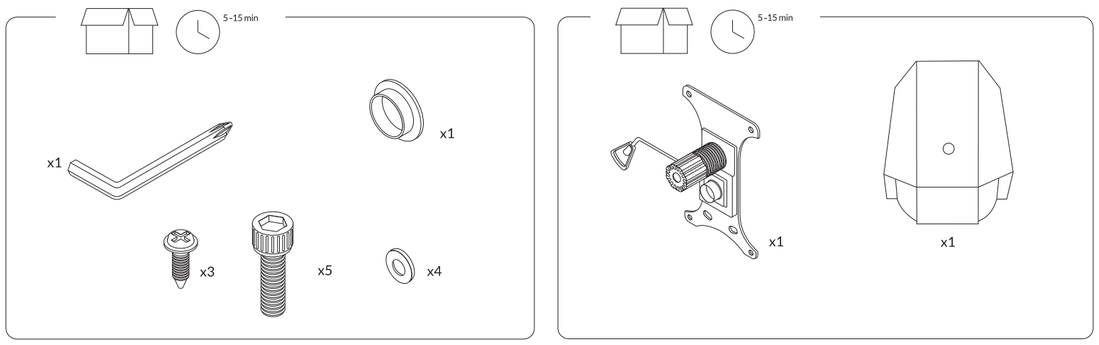

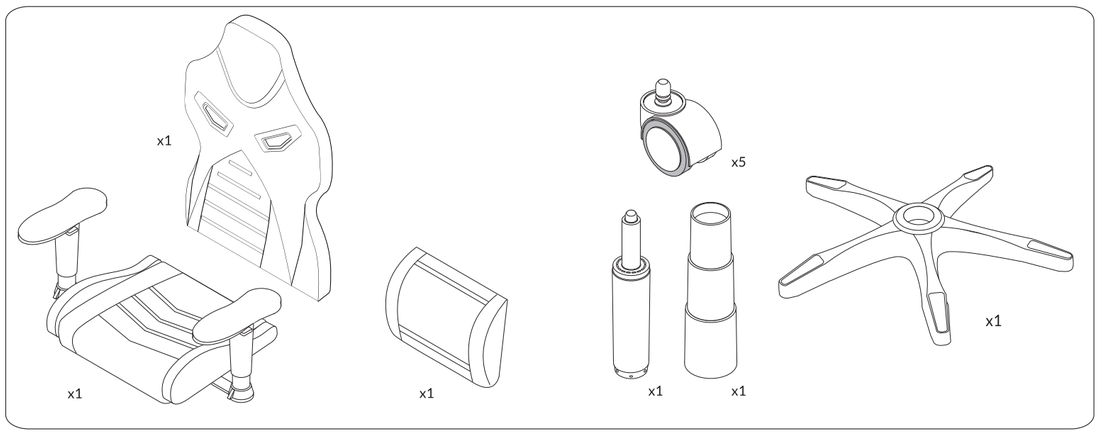

1

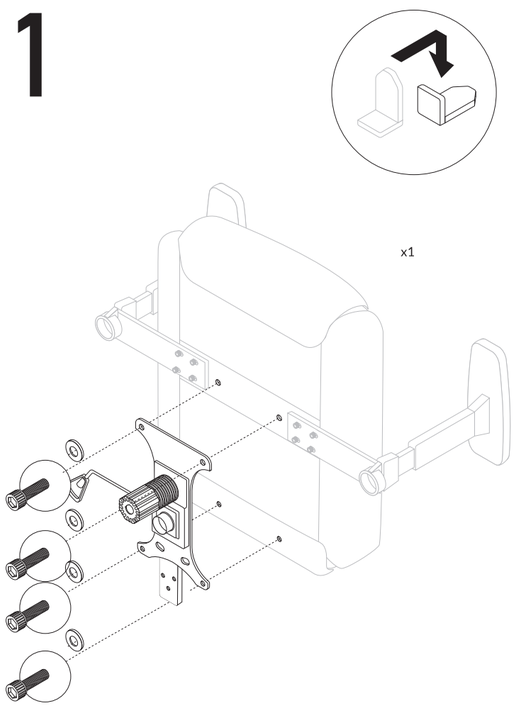

2

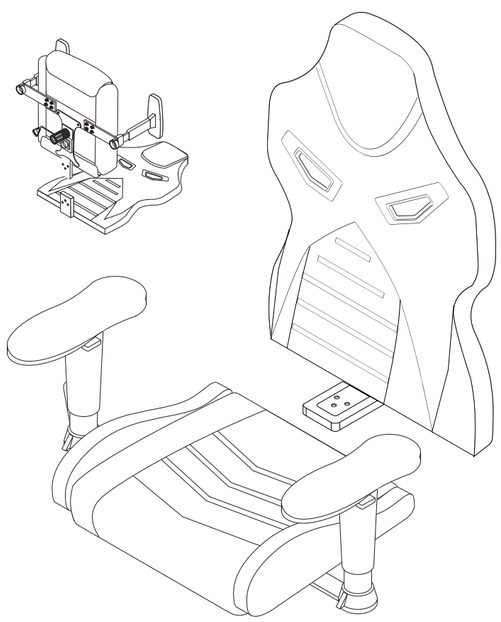

3

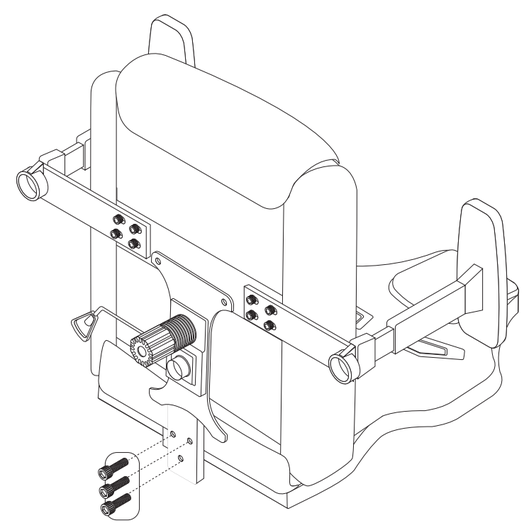

4

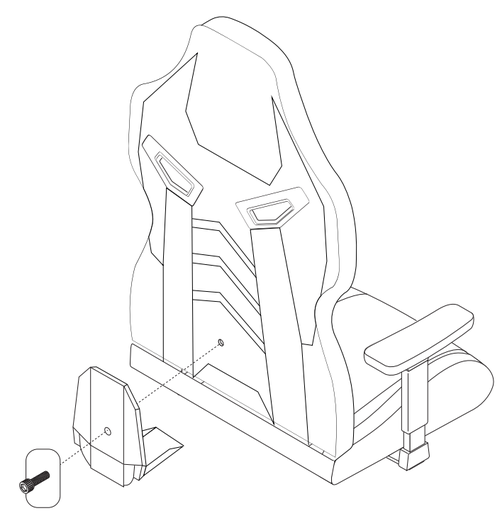

5

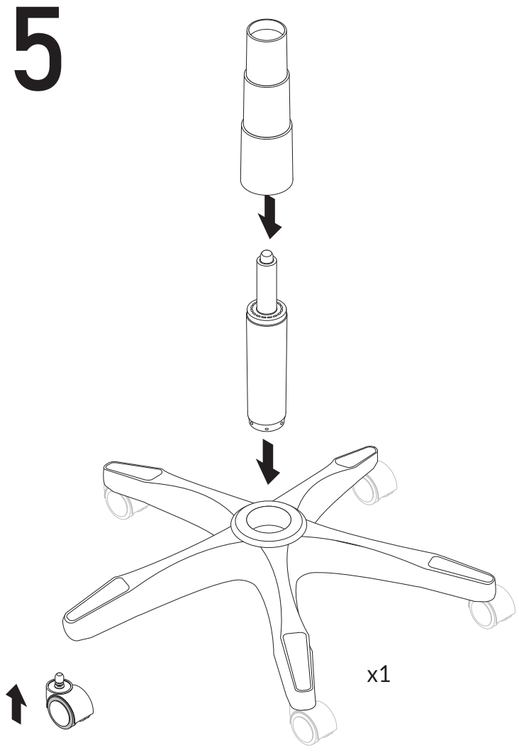

6

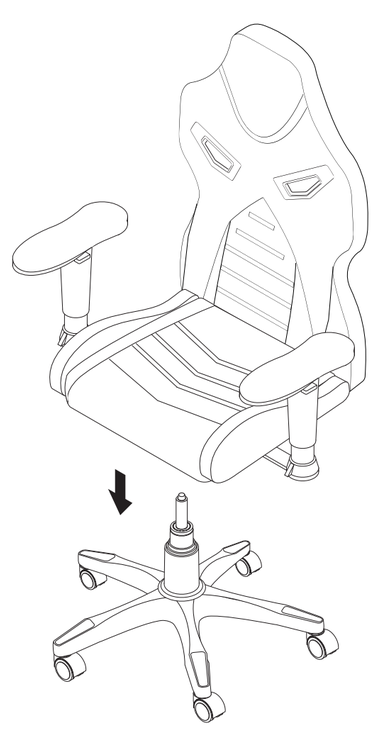

7

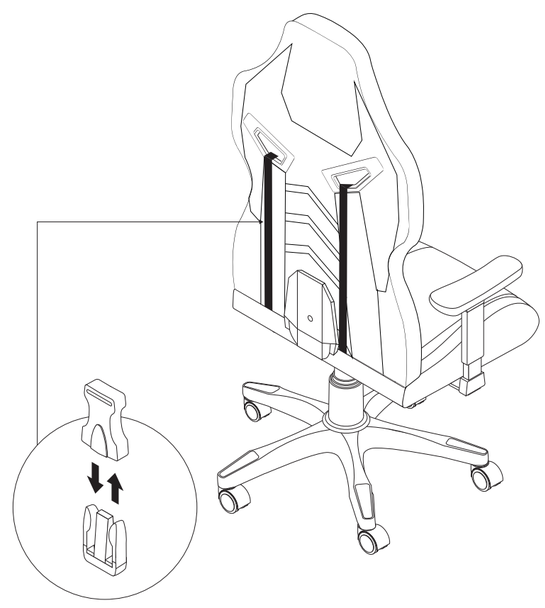

8